Current part is item (17) on diagram. Available at www.oshkoshequipment.com

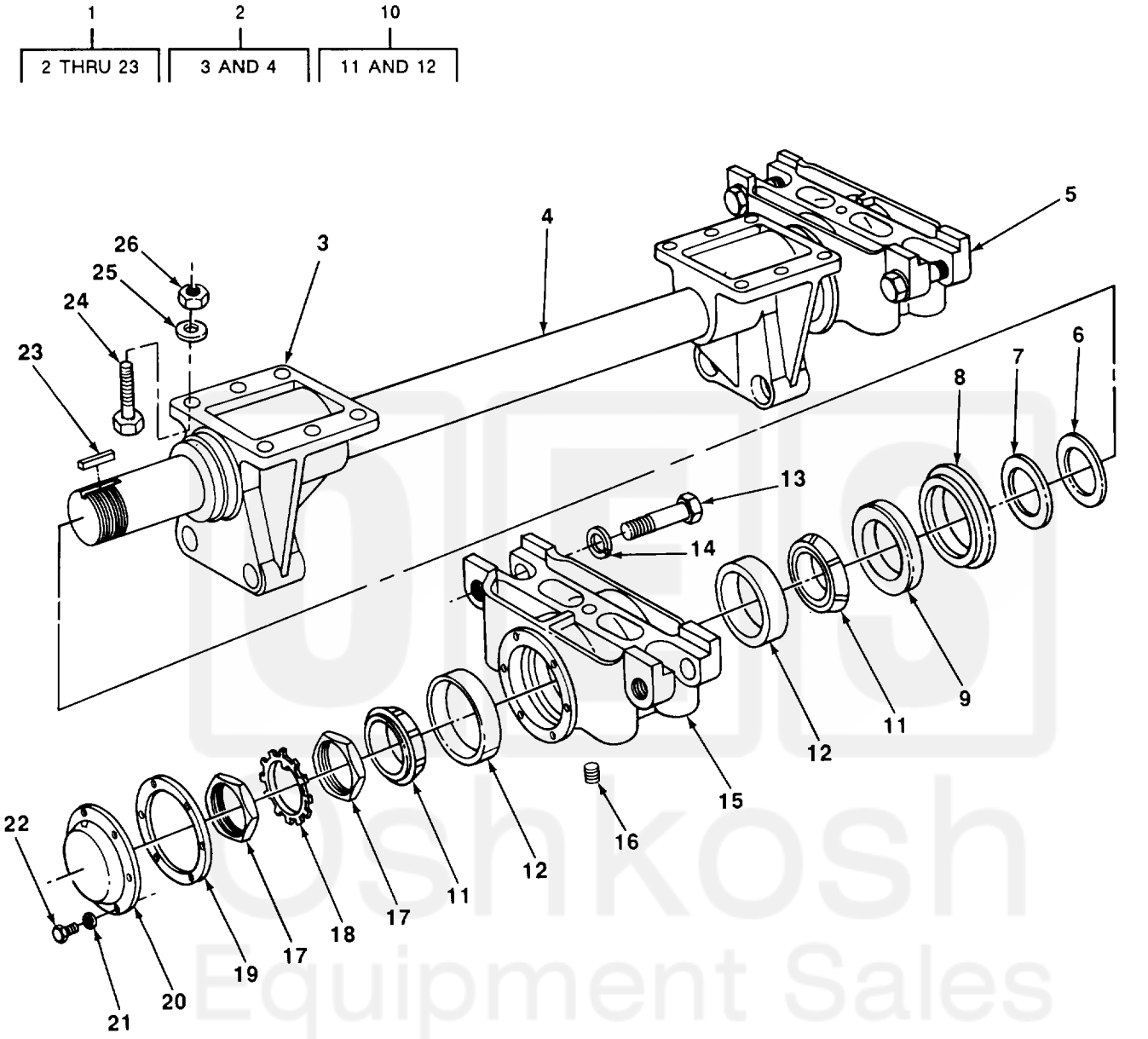

FIGURE 28. AXLE AND BRACKET ASSEMBLY.

Current part is item (17) on diagram. Available at www.oshkoshequipment.com

Current part is item (17) on diagram. Available at www.oshkoshequipment.com

(1) ITEM NO	(2) SMR CODE	(3) CAGEC	(4) PART NUMBER	(5) DESCRIPTION AND USABLE ON CODES (UOC)	(6) QTY
				GROUP 1100 REAR AXLE ASSEMBLY	
				FIG. 28 AXLE AND BRACKET ASSEMBLY	
1	PAFFF	19207	10896741	ARM,CONTROL,VEHICUL REAR SPRING	1
2	PAFZZ	19207	7700126	BRACKET ASSEMBLY,AX REAR SPRING SUSPENSION	1
3	PBFZZ	19207	7700127	BRACKET,AXLE ASSEMB	2
4	XAFZZ	19207	7700125	BAR TANDEM AXLE	1
5	PAFZZ	19207	7521645	SEAT ASSEMBLY,SPRIN REAR SUSPENSION SPRING	2
6	PAFZZ	19207	7521643	WASHER,FLAT BRACKET ASSY	2
7	PAFZZ	19207	7521646	WASHER,FLAT AXLE BRACKET ASSEMBLY BEARING	2
8	PAFZZ	19207	7521647	RETAINER,PACKING BRACKET ASSY BEARING	2
9	PAFZZ	19207	10896684	SEAL,PLAIN ENCASED BRACKET ASSY	2
10	PAFZZ	19207	11609331	BEARING,SLEEVE AXLE AND BRACKET ASSEMBLY	4
11	PAFZZ	19207	11601709	BUSHING TAPERED SPR SEAT BEARING	4
12	XAFZZ	19207	11609419	CUP,TAPERED ROLLER AXLE BRACKET ASSEMBLY	4
13	PAFZZ	19207	7521642	BOLT MACHINE SPRING SEAT	4
14	PAFZZ	96906	MS35338-52	WASHER,LOCK SPRING SEAT ATTACH	4
15	PAFZZ	19207	8757712	SPRING SEAT ASSEMBL	2
16	PAFZZ	96906	MS20913-1S	PLUG,PIPE AXLE BRACKET ASSEMBLY	2
17	PAFZZ	19207	10896720	NUT,PLAIN,HEXAGON BRACKET ASSY BEARING	4
18	PAFZZ	19207	10896695	WASHER, KEY ADJUSTING NUT LOCKING	2
19	PAFZZ	19207	7521648	GASKET AXLE BRACKET ACCESS COVER	2
20	PAFZZ	19207	7521640	COVER,ACCESS BRACKET ASSY	2
21	PAFZZ	19207	7410218	WASHER,LOCK BRACKET ASSY COVER ATTACH	12
22	PAFZZ	96906	MS90725-31	BOLT,MACHINE BRACKET ASSY COVER ATTACH	12
23	PAFZZ	96906	MS20066-231	KEY,MACHINE TANDEM AXLE BAR RETAINING	2
24	PAOZZ	96906	MS90727-188	SCREW, CAP, HEXAGON	12
25	PAOZZ	96906	MS35340-51	WASHER,LOCK	12
26	PAOZZ	96906	MS51968-23	NUT,PLAIN,HEXAGON	12
				END OF FIGURE	

Current part is item (17) on diagram. Available at www.oshkoshequipment.com